CONSTRUCTION EQUIPMENT

SUNWARD
INNOVATION LEADS TO VALUE

MEDIUM EXCAVATOR SWE 215F

Engine Power: **129 kW** / Machine Weight: **21 800 kg**

OFFERING THE BEST AVAILABLE DIGGING FORCE – AND SO MUCH MORE

Presenting the SWE 215F

With great pride, we introduce the **SWE 215F medium excavator** – specifically designed and certified for European market requirements. This top-of-the-line 21.8 t medium excavator offers excellent performance, comfortable and safe operation, and convenient maintenance. Versatile and durable, with a long lifetime, this machine is perfect for roads or buildings, quarrying, demolition or forestry.

The SWE 215F's design, EU Stage V engine, and enhanced hydraulics system deliver smooth operation and increased productivity. A product of our company's innovative DNA, the SWE 215F creates value for our customers and improves the quality of life.

In just 20 years, Sunward has grown to become one of the world's top 50 construction machinery manufacturers and top 20 excavator companies. Today, our products are exported to more than 100 countries worldwide.

Thank you for sharing our pride!

Professor He

Professor He

Main features

RELIABLE, POWERFUL AND DURABLE

We never compromise on reliability – and the 21.8 t SWE 215F is no exception. We know it will be used by professional construction companies that are looking to get their work done with a durable machine they can trust. So, just like our other machines, all key components come from the world's top premium brands. From the Cummins Stage V engine to the Japanese-made hydraulic system, all is set for reliability and durability. Moreover, Sunward's unique hydraulic system enhances this machine's performance by providing one of the most powerful bucket break-outs on the market.

VERSATILE AND OPTIMIZED

Because a 22t machine is essentially a multiple large job site machine, it must be versatile. The SWE 215F has 3 major working modes and 3 extra working modes for the attachments – making this machine's versatility second to none. So, Sunward provides the highest flexibility on the market as standard, accommodating any working requirement and tool (including Tilt rotators).

SAFE AND COMFORTABLE

Because we know that safety and comfort should go hand-in-hand, the SWE 215F keeps you safe and provides every comfort in all working conditions. The fully EU-certified cab features ROPS, TOPS and FOPS requirements, from the reinforced undercarriage to the reinforced frames for the boom and arm. And thanks to the full visibility provided by 3 powerful and perfectly positioned LED lights as a standard feature, you stay safe, day and night.

EASY TO MAINTAIN AND SERVICE

All Sunward machines are designed, prototyped and then disassembled – in the spirit of reverse engineering – simply to test how easy they are to be serviced and maintained. And they are! From ground-level access to service components, to the availability of parts – maintaining the SWE 215F is easy and simple. So, it's no surprise that an operator only needs to try out our machines to be thoroughly convinced!

Reliable, Powerful and Durable

All key components are carefully selected

For example, we selected the award-winning EU Stage V Cummins B6.7 engine in its latest version. This engine sets the industry standard for reliability and durability. Its increased fuel economy and longer maintenance intervals contribute to lower cost of operation and lower Total Cost of Ownership. With near-zero emission levels, it complies with the European Union's latest requirements and delivers from 158 hp to 330 hp (116–243 kW) without compromising power, performance, or fuel economy.

As the hydraulics are often regarded as the heart of the machine, Sunward sources exclusively from the highest references in the market. For the SWE 215F, we selected Japanese premium brands KPM for the hydraulic pump and swing motor and KYB for the Main Control Valve (MCV). Both highly reliable brands are known for their high efficiency and long-life components, designed specifically to meet the demands of hydraulic excavators.

To provide the best value to the user, we apply our 'Innovation Leads to Value' motto to every element of the machine – even to externally sourced components and the way we integrate them.

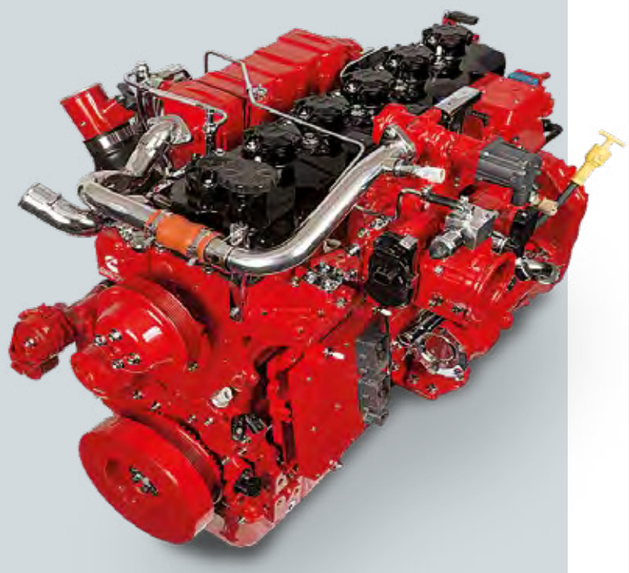

Premium brand critical components

KPM
Main Pump

With this new premium-quality pump, and our innovative thinking, we increased the machine's displacement by 7%, power by 4%, and volume efficiency by 6% – making the entire excavator more energy-efficient.

KYB
Main Control Valve (MCV)

A large port size MCV provides more flow capability and less flow resistance – generating less heat and energy consumption, while still allowing a faster working speed. Our professional and dedicated calibration provides the operator with a better operating experience.

KPM
Swing Drive Motor

Our large displacement and big torque motor features multiple functions, such as self-lock, anti-rebounding, and hydraulic and mechanical duplicate brake system to ensure smooth operations.

NABTESCO
Travelling motor

Each track is driven by a 2-speed automatic shifting travel motor, equipped with multiple discs and spring-locked and hydraulic-released brake. The unchallengeable traveling speed can reach up to 5.2 km/h.

Strengthened boom & arm

Finite Element Analysis has been used to calculate the best load distribution throughout the boom structure. Also, the key parts of the SWE 215F, such as the boom and the arm, are designed with an increased sheet material thickness with all supporting elements being made of high-strength, high-ductility and structural steel die-forged pieces. This analysis, combined with thicker material, means that element fatigue is limited and both reliability and component life are increased. To better protect the base of the arm, reinforced bars have been added and both the arm's center and end have been strengthened.

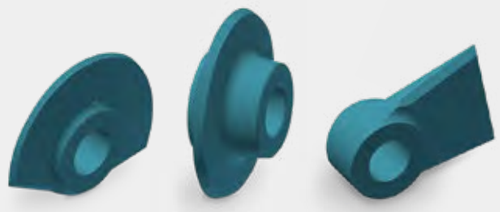

Forged supporting elements

STRESS RELIEF PROCESS FOR STRENGTH AND DURABILITY

The SWE 215F is meant to handle normal construction work as well as it handles the heavy-duty work. That is why it's important to integrate that requirement in the initial stage of the machine's production. The SWE 215F's heavy-duty implements are delicately annealed, which eliminates the residue stress in weld seams and increases the machine's reliability significantly.

THE ANNEALING PROCESS

After welding, the natural cooling process (with the risk of uneven cooling) is prevented by heating the metal in an isolated chamber to 600-800°C and then cooled down slowly. This controlled cooling process – which usually takes 5-8 hours – permeates the texture of the steel with much better uniformity and compactness, while avoiding residual stress and defects. Therefore, it increases the durability of the machine. This kind of cooling process is usually not adopted by manufacturers who want to save time and money. But at Sunward, we do not compromise on quality – we strive to provide machines of the highest reliability and durability.

REINFORCED X CHASSIS WITH EXCELLENT RESISTANCE TO DISTORTION

Designed using Finite Element Analysis and 3D computer simulation, the X-shaped undercarriage ensures optimum structural integrity and durability.

From design to manufacturing process, all is done for reliable heavy-duty performance

In your work, you need equipment you can rely on. At Sunward, we use highly specialized design and analysis tools to make sure our machines are as robust and durable as can be. Our materials and structures undergo stringent testing for strength and resilience under the most extreme conditions. We constantly manufacture the most durable machines to ensure the lowest cost of ownership possible.

The boom and arm are designed with the reliability standard of 20 000 hours.

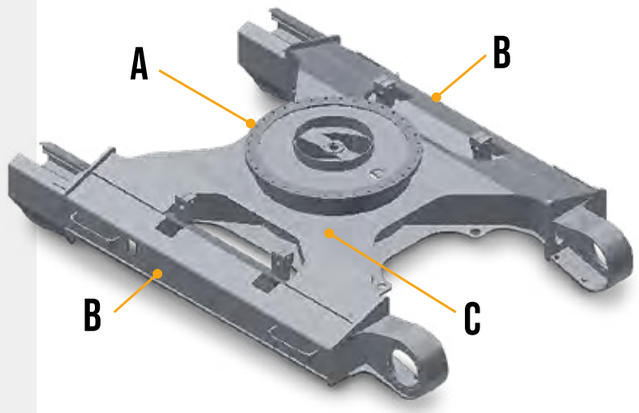

A. The seat of the slew bearing is made of one ring-forged piece to reduce welding.
B. A track frame with a larger cross-sectional side box and a thickened bottom plate are used to improve the overall strength.
C. Both the cross-section area of the X-shaped frame and the plate thickness are increased to improve the overall strength.

Versatile and Optimized

Designed for versatility

In the spirit of Sunward's motto – 'Innovation Leads to Value' – the design and engineering of the SWE 215F is focused on generating optimal value for the machine's owner, while offering optimum versatility to the machine's operator. The SWE 215F can be used in a large variety of working conditions and applications. And thanks to the 3 separate auxiliary lines, the 3 bucket working modes, and the 3 attachment work modes, an operator needs only a few minutes to fully appreciate the possibilities offered.

Designed for optimization

The Hyperbolic Curve and super Wear-Resistant New Style Bucket provides incredible operating efficiency. Both bottom and side plates of the bucket are made of high-strength wear-resistant steels from a premium brand, which makes the machine suitable for highly abrasive jobs. With this innovative design, the digging resistance is reduced significantly. So, digging is much smoother, and fuel consumption is significantly lower.

COMPARISON OF BUCKET DIGGING TRAJECTORIES

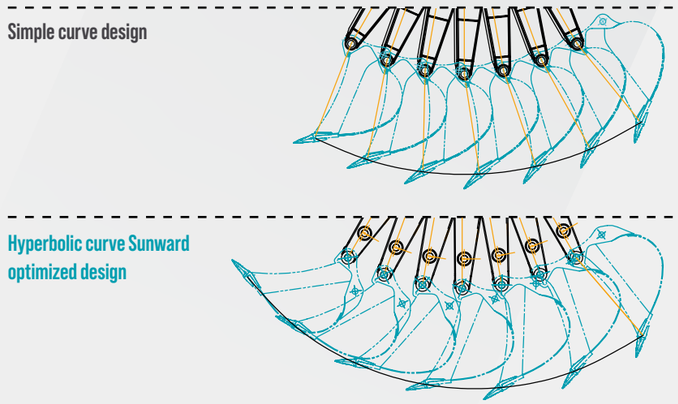

AUX 2 lines

The highest auxiliary lines standard set-up available on the market

The SWE 215F can adapt to any job site, thanks to the complete auxiliary settings that are built-in as standard – providing fully adjustable pressure and flow monitoring for all types of attachments, including a tilt rotator.

This results in no less than 3 separate auxiliary lines as standard (while the market provides 1 or 2 lines as standard), which are distributed as follows:

- 1 line at the boom of the arm (AUX1), which is used primarily for the hydraulic quick-hitch
- 1 line for greater flow to fulfill the requirements of a flow-demanding attachment, such as a breaker (AUX2)
- 1 line with lesser flow as an extra line for attachments that are equipped with 2 actuators (AUX3)

2 of these auxiliary lines are equipped with a shut-off valve, making the attachment installation easy and oil leakage-free.

Best digging force even in heavy mode

Best digging force in the market

The SWE 215F's low 340-bar pressure generates the highest digging force – 155 kN – in the market. Sunward's machine also has the highest hydraulic efficiency, which results in low fuel consumption. Remember: with Sunward, Innovation Leads to Value!

THE SWE 215F IS SYNONYMOUS WITH EASY CONNECTION AND EASY OPERATION.

The machine accepts several attachments to perform all desired jobs.

3 attachment work modes

Operators enjoy both versatility and fuel consumption optimization thanks to each dedicated mode:

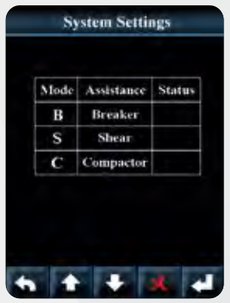

B HYDRAULIC BREAKER

S HYDRAULIC SHEAR JAWS

C HYDRAULIC COMPACTOR

By controlling 2 pumps independently, the SWE 215F optimizes attachments for effective flow rate setting, enabling various operations and matching the site's environment. You set the auxiliary circuit flow for each attachment work mode on the simple and clear monitor screen. So, you don't need to adjust the flow mechanically.

3 bucket working modes

The operator can choose the proper working mode for different kinds of jobs:

LIGHT MODE

for light-duty jobs – to get the machine fine controled.

STANDARD MODE

to get the job done with greater fuel-efficiency – optimizes performance and fuel efficiency of the equipment for general load work.

HEAVY MODE

for hard digging or to get the job done more efficiently – maximizes speed and power of the equipment for heavy load work.

3 auxiliary lines as standard make working with tilt rotators easy

Safe and Comfortable

On top of their EU certification, all Sunward machines on the European market are designed to meet European customer needs. And that includes no compromise between comfort and safety.

Robust undercarriage for stability

The large undercarriage provides robust stability enhanced by 8 lower rollers and 2 top rollers. This concept ensures safety, comfort, and maintainability.

Engine STOP protection for extra safety

The SWE 215F's engine protection system helps prevent progressive engine damage by proactively warning the operator of potentially damaging engine conditions and then by derating or shutting down. Sunward's engine start & stop protection technology reduces engine wear due to improper operation, prolonging the engine's service life.

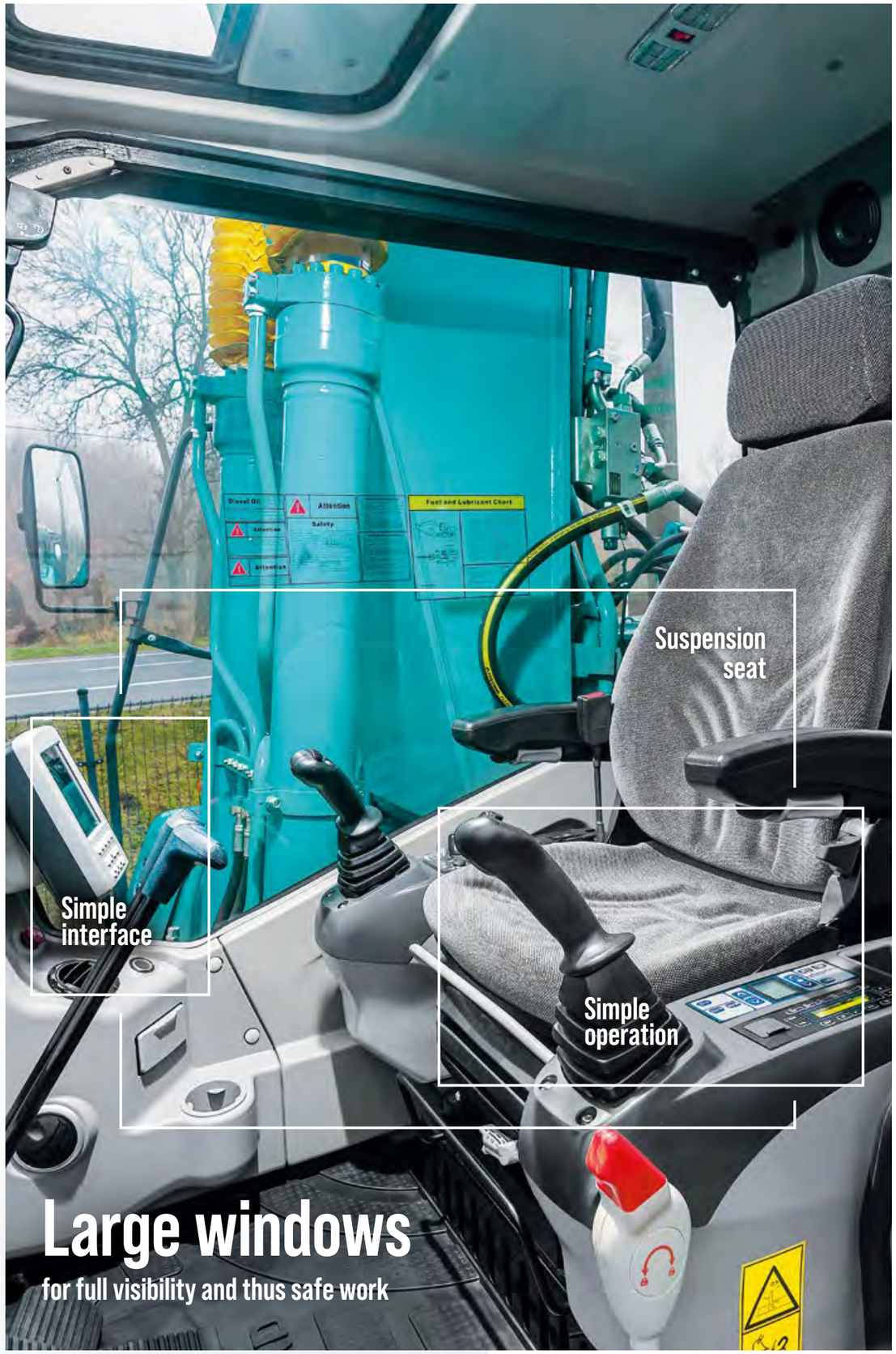

Fully equipped & spacious cab

The high-strength SWE 215F cab meets ROPS, TOPS and FOPS requirements, which are standard and among the first features to ensure a safe and comfortable job in all application environments.

To accommodate tall European operators, the cab is easy to climb in and out of; and its roomy interior provides a comfortable and efficient work environment.

All is designed to keep operators comfortable, productive, and absolutely safe. The fully adjustable suspension seat – with easy access to several storage compartments – is standard. The air conditioning system has larger vents and regulates the interior temperature automatically for a better cooling or heating experience. The adjustable arm rest and the radio with USB ports allow you to work steadily without feeling tired.

Finally, the safety pack – including fire extinguisher, safety hammer, and safety belt – contributes to total peace of mind.

Large-angle view and wide roof-top window facilitate all standard and elevated works

Rear camera: our standard features are options to others.

360° view and color monitoring screen

The latest standard equipment is the rear camera – which complements the large windows and glass rooftop to provide a 360° view. The easy-to-read 5.7" color monitoring screen – with centralized functions and simple interface for easy operation – makes all key information readily accessible: machine status, engine rpm and temperature, coolant temperature, fuel level, error codes, throttle gear, menu and switches and loading counter. So, the SWE 215F promotes working safely and efficiently, without stress.

Easy Maintenance and Service

Centralized service points

The SWE 215F is as easy to maintain as it is to operate. To reduce maintenance time and cost, the covers on the side and the top provide direct access to the service points. With extremely easy access to the fuel tank and centralized grease fittings, we even added handrails to make it easier to get around the machine.

01 ENGINE COMPARTMENT

Easy and quick check and refill of the engine oil level

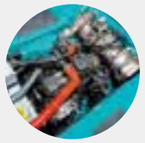

02 RADIATOR & AIR FILTER COMPARTMENT

Easy check of the Coolant Expansion and Windshield Washer Tank

03 HYDRAULIC PUMP COMPARTMENT

Easy check and replacement of oil filter, fuel filter, fuel/water separator, and pilot filter

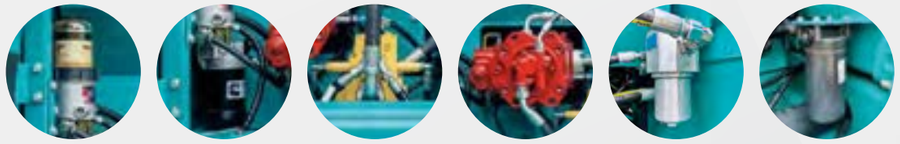

04 DEF DOSING SYSTEM

Well protected and easy access for maintenance

05 INTEGRATED GREASE FITTINGS

For almost zero maintenance routine

UP TO **3** YEARS OF WARRANTY

STANDARD FOR ALL SUNWARD PRODUCTS

Best Value for Money from A to Z

The SWE 215F's expert design includes a well-thought-out selection of components that streamline operation and maintenance. Our design choices result in a machine that provides so many standard features, premium-brand key components, and capabilities at the right price. And furthermore, Sunward's own genuine spare parts are economical as well – and all of this best value for money is crowned by a 3-year standard warranty.

Did you know?

Operators and maintenance teams can enjoy a machine that has been designed, prototyped and then disassembled – in the spirit of reverse engineering – to facilitate all service and maintenance operations.

Direct Support within Europe

Sunward's European headquarters are strategically located in Tessenderlo, Belgium, in the heart of Europe: 45 minutes from Brussels International Airport and 60 minutes from the port of Antwerp.

Readily available machines & parts

From its Tessenderlo headquarters, Sunward Europe can ensure rapid delivery of machines and spare parts everywhere in Europe. Machines can be delivered within a few weeks from local dealers, and Sunward machine operators benefit from quick and easy access to the large Dealers' Parts Warehouse (DPW) distribution center in Tessenderlo. Sunward Europe guarantees an availability rate of 95% for its spare parts.

PARTS CAN BE DELIVERED WITHIN 24 HOURS

24h

Dealers all over Europe, UK and Middle East

Dealers are at the heart of Sunward's passion for continuous improvement. Our dealers' knowledge is a real asset – and because they serve local market needs, their feedback enhances our engineering and design innovations. Sunward's innovations create value – for machine operators and, ultimately, for our dealers.

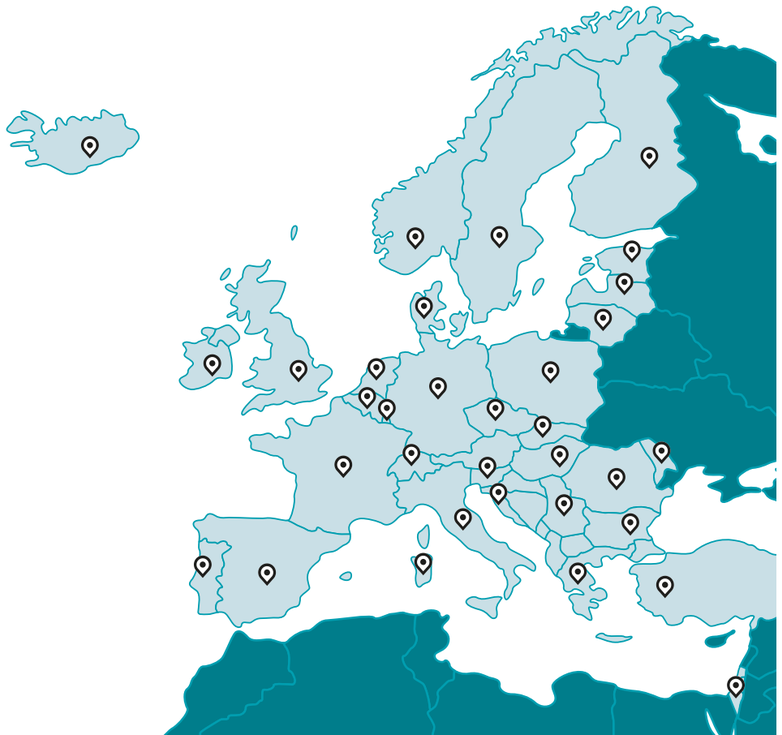

EQUIPMENT

The standard and optional equipment varies from country to country. For more information, please contact us.

		STANDARD EQUIPMENT	OPTIONAL EQUIPMENT
ENGINE	Turbocharging, 4-stroke, water-cooling, direct injection, diesel engine	●	
	Air filter with indicator	●	
	Multi-stage fuel filtering system	●	
	Emergency engine shutdown device	●	
	Oil filtering system	●	
	Cooling unit easy to clean	●	
HYDRAULIC SYSTEM	Automatic pressure-boosting hydraulic system	●	
	Boom and arm regeneration valve	●	
	Swing relief & cushion valve	●	
	Auxiliary hydraulic valve	●	
	Combined flow system & boom priority	●	
	Boom and arm holding valve	●	
	Multi-stage filtering system	●	
	1st Auxiliary hydraulic circuit line to arm end (2 pipes)	●	
	2nd Auxiliary hydraulic circuit line to arm end (2 pipes)	●	
	3rd hydraulic quick hitch line to arm end (2 pipes)	●	
	Oil return pipe (1 pipe)	●	
	Hydraulic quick hitch pipe	●	
	Hydraulic quick hitch		●
ELECTRONIC/ ELECTRICAL CONTROL SYSTEM	ELAC system	●	
	Self-diagnosable system	●	
	Automatic idling system	●	
	Adjustable LCD color monitor	●	
	Restarting-prevention circuit for engine	●	
	Battery (2×12 V/120 Ah)	●	
	Advanced mode control system	●	
	Engine speed sensor-based power control system	●	
	Safe shutdown/startup function	●	
	Battery cut-off switch	●	
	2× High-performance LED work lights on both sides of the boom	●	
	1× High-performance LED work light on right side of cab	●	
	Starting motor (24 V/7.7 kW)	●	
	Auto-lubrication system		●
	Electric refuelling pump		●
	Smart fleet system		●

		STANDARD EQUIPMENT	OPTIONAL EQUIPMENT
CAB AND INTERNAL DEVICES	TOPS / FOPS / ROPS cab	●	
	Spring aided silicone oil shock absorber	●	
	Radio (equipped with MP3 player and USB interface)	●	
	All-weather soundproof cab	●	
	RH+LH Hydraulic Joystick with electronic proportional thumb control switch	●	
	Multi-directional adjustable seat	●	
	Fire extinguisher	●	
	Safety hammer	●	
	Cup holder	●	
	Full-automatic air conditioner	●	
	Pilot cut-off lever	●	
	Windscreen wiper	●	
	Openable roof-top and left windows, turn-over front wind shield	●	
	Rearview mirror	●	
	Cigar lighter	●	
	Sunshade curtain	●	
	Beacon light	●	
	Travel alarm	●	
	Rear camera	●	
	Cab headlight	●	
	Cab back light	●	
ATTACHMENTS	Quick coupler		●
	One bucket as standard	●	
	450 mm bucket		●
	900 mm bucket		●
	1 120 mm bucket		●
	2 100 mm bucket		●
BOOM	5 700 mm boom	●	
	Boom safety valve	●	
ARM	2 920 mm arm	●	
	Arm saftey valve	●	
TRACK	Steel tracks 600 mm	●	
	Steel tracks 700 mm		●
	Steel tracks 800 mm		●
	Rubber pads for steel tracks		●
OTHERS	Hand rail	●	

TECHNICAL PARAMETERS

DIMENSIONS		Boom Length	5 700 mm
		Arm Length	2 920 mm
	A	Total Length	9 570 mm
	B	Total Height	2 970 mm
	C	Total Width	2 800 mm
	D	Counterweight ground clearance	1 060 mm
	E	Mini ground clearance	478 mm
	F	Tail swing radius	2 750 mm
	G	Length to center of rollers	3 465 mm
	H	Track Length	4 260 mm
	I	Track Gauge	2 200 mm
	J	Undercarriage Width	2 800 mm
	K	Track width	600 mm
	L	Cab height	2 970 mm
	M	Engine Cover Height	2 320 mm
	N	Turntable width	2 710 mm
SPECIFICATION		Operating weight	21.8 t
		Bucket capacity	1.0~1.1 m^3
ENGINE		Brand	Cummins
		Model	B6.7
		Type	4 Stroke, Turbo Charged, Air cooled
		Emmision rating	EU Stage V
		Power	129 kW/2 200 rpm
		Max Output Torque	881 Nm/1 300 rpm
		Displacement	6.7 L
HYDRAULIC SYSTEM		Type of pump	2 × Variable Piston Pump (KPM)
		Max Pump Displacement	2 × 240 L/min
		System Pressure	31.4/34.3 MPa
		Type of pilot pump	1 × Gear Pump (KPM)
		Max Pilot Flow	21 L/min
		Pilot Pressure	3.9 MPa
PERFORMANCE		Swing speed	11.8 rpm
		Travel Speed	3.3/5.2 km/h
		Gradeability	35°
		Track Width	600 mm
		Ground Pressure	46 kPa
TANK CAPACITY		Diesel tank capacity	385 L
		Hydraulic tank capacity	290 L
CAB		Enclosed Cab	
		A/C	
		Heating	
AUXILIARY PIPELINES		Aux1 (Breaker)	
		Aux2	
		Quick hitch (w/constant pressure valve)	
		RH+LH hydraulic joysticks with proportional control rocker switch	
TRACK		600 mm steel track	600 mm
		700 mm steel track	700 mm
		800 mm steel track	800 mm
BUCKET		450 mm bucket	0.25 m^3
		900 mm bucket	0.63 m^3
		1 120 mm bucket	1.0 m^3
		2 100 mm bucket	0.95 m^3
ARM		2 920 mm arm	2 920 mm
BOOM		5 700 mm boom	5 700 mm
SAFETY VALVE		boom & arm safety valve	
LIGHT		Normal light	LED
ALARM		Travel alarm	

DIMENSIONS

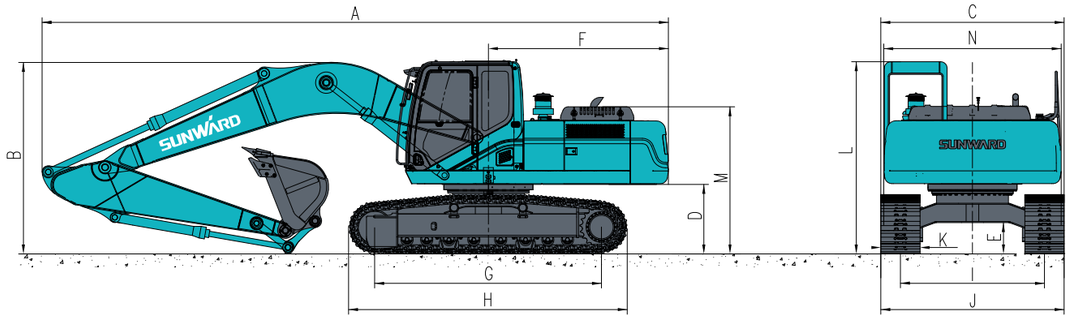

WORKING RANGE

WORK RANGE & BREAKOUT FORCE		Boom Length	5 700 mm
		Arm Length	2 920 mm
	a	Max digging height	9 750 mm
	b	Max dumping height	6 980 mm
	c	Max digging depth	6 750 mm
	d	Max digging depth at 2.44 m radius	6 560 mm
	e	Max vertical digging depth	5 900 mm
	f	Max reach	9 940 mm
	g	Max reach at ground level	9 775 mm
	h	Min. front swing radius	3 560 mm
		Bucket breakout force	155 kN
		Arm breakout force	110 kN

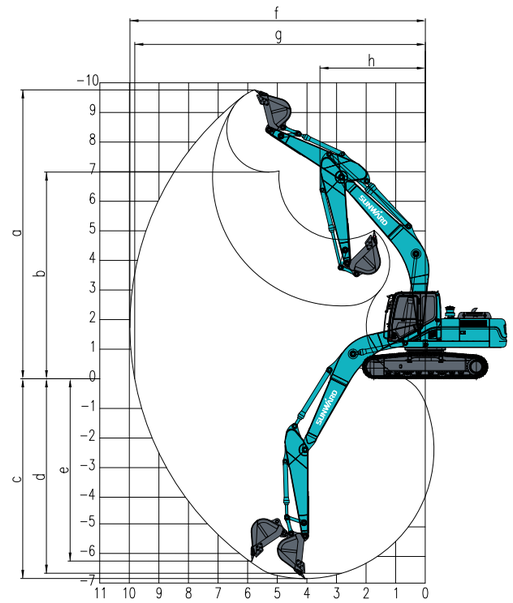

LIFTING CAPACITY

Load point height \ Load radius at	MAX reach			4.0 m		5.0 m		6.0 m		7.0 m		8.0 m	
	Over-front (kg)	Over-side (kg)	A/m	Over-front (kg)	Over-side (kg)	Over-front (kg)	Over-side (kg)	Over-front (kg)	Over-side (kg)	Over-front (kg)	Over-side (kg)	Over-front (kg)	Over-side (kg)
8.0 m	3158*	3038	5.724	/	/	/	/	/	/	/	/	/	/
7.0 m	3323*	2558	6.676	/	/	/	/	/	/	/	/	/	/
6.0 m	3524*	2093	7.366	/	/	/	/	/	/	3419*	2970	/	/
5.0 m	3532*	1830	7.868	/	/	/	/	3845*	3776*	3584*	2970	/	/
4.0 m	3619*	1643	8.214	/	/	4637*	4959*	3959*	3548	3872*	2835	3619*	1988
3.0 m	2580*	1710	8.425	/	7778*	5272*	4823	4463*	3240	3225	2595	3173	1935
2.0 m	2198	1613	8.543	/	6004	5855*	4313	4924*	3090	4420*	2490	2543	1830
1.0 m	1545	1545	8.600	/	5550	7273*	4125	5438*	3030	3203	2348	3015	1793
0.0 m	1635	1635	8.324	/	5745	5888	4013	4388*	3015	4185	2258	3450	1740

Note:
1. The value with * symbol is the rated lifting capacity (calculated in accordance with 87 % of the test data)
   The value without * symbol is the anti-tipping capacity (calculated in accordance with 75 % of the test data)
2. A: the distance from swing center to the vertical line of heavy object
   B: the distance from bucket mounting pin and horizontal plane

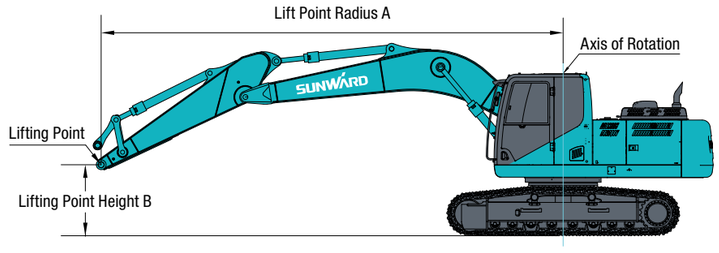

Sunward has one or more dealers in each of these countries.

Please check our website for our current list of dealers.

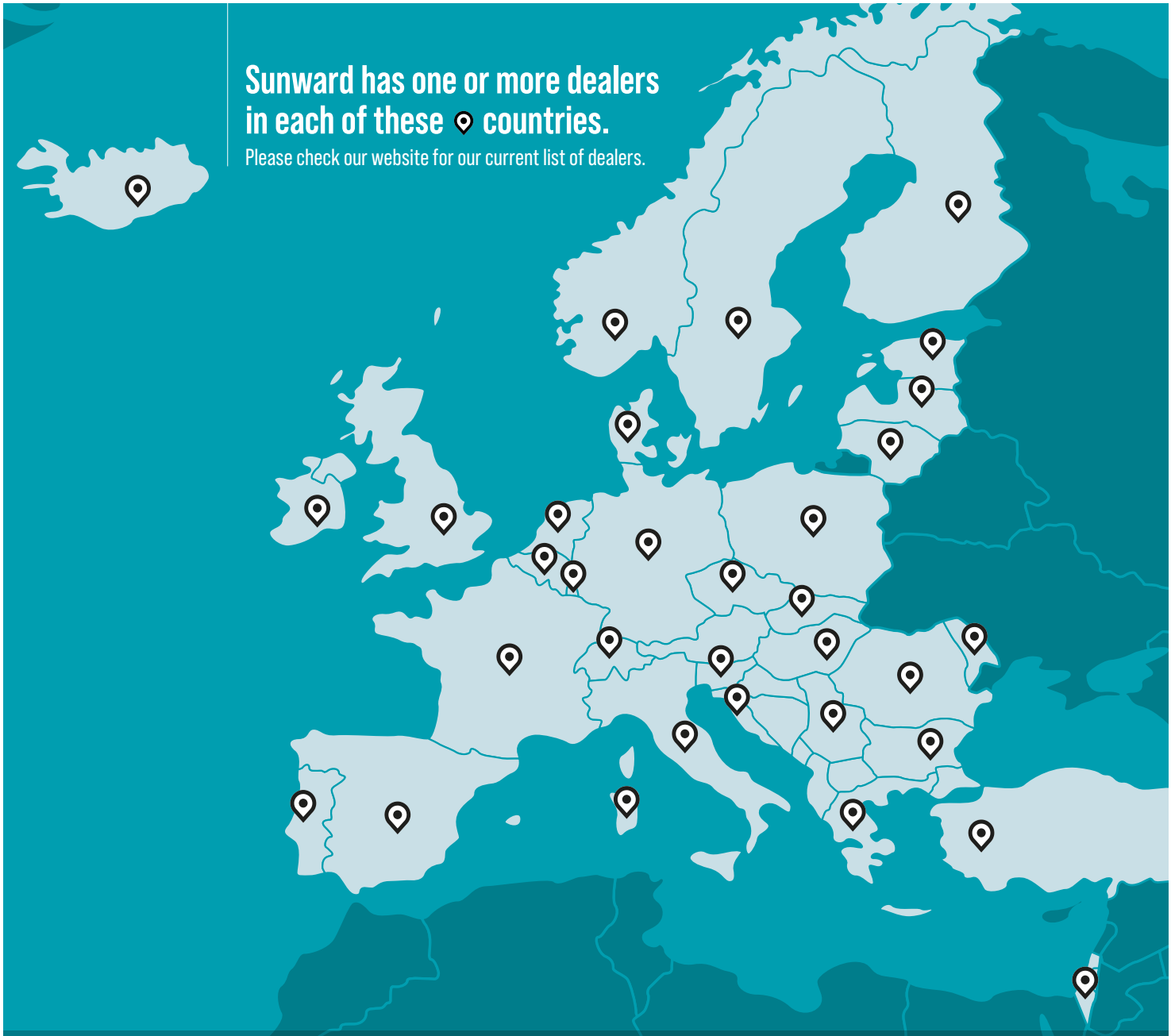

SUNWARD EUROPE HEAVY INDUSTRY N.V

Havenlaan 1
B-3980 TESSENDERLO
Belgium

+32 (0) 11 43 46 66
info.eu@sunward.cc
www.sunward.eu

CE_EU_L3_SWE215F-20210930_EN_EU

DEALER CONTACTS

Specifications may change and this brochure may not reflect the latest specifications. Photographs in this brochure may not reflect market configuration. Please consult your dealer to confirm specifications and configurations.
All rights of this brochure are reserved to Sunward International Sales. Please consult the operator's manual before use of any Sunward equipment.